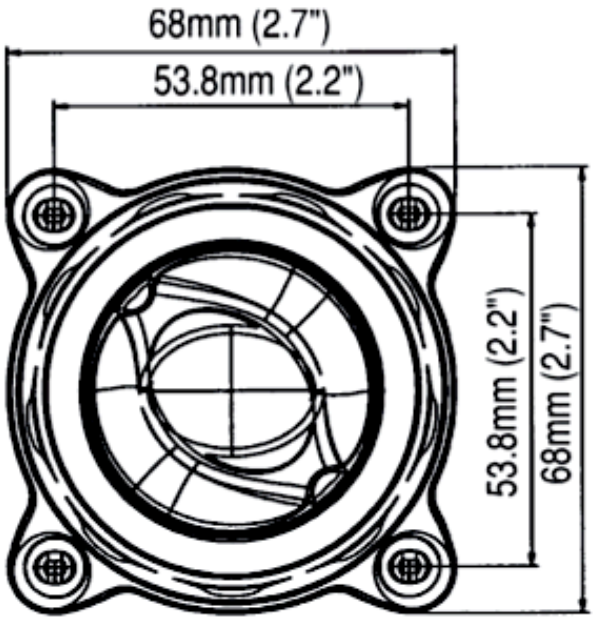
68mm (2.7")
53.8mm (2.2")
53.8mm (2.2")
68mm (2.7")

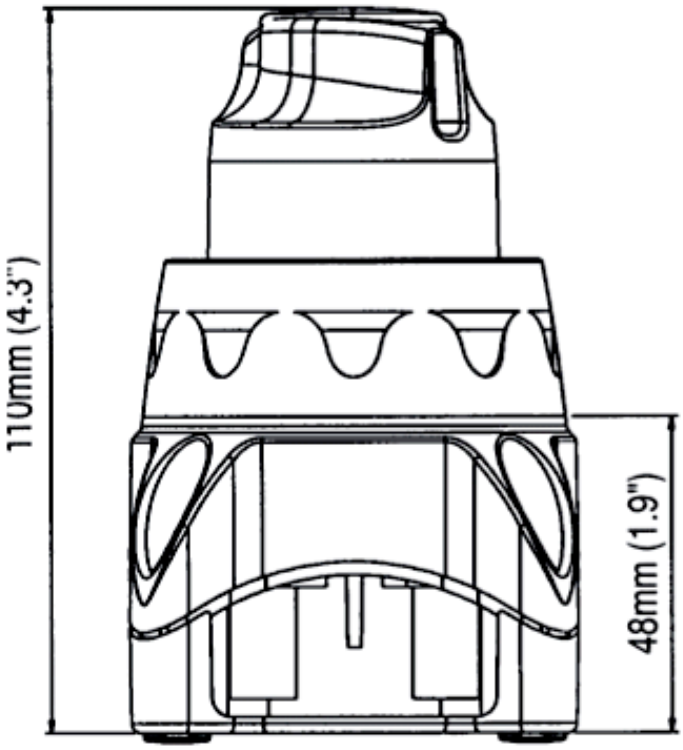
11Umm (4.3")
48mm (1.9")

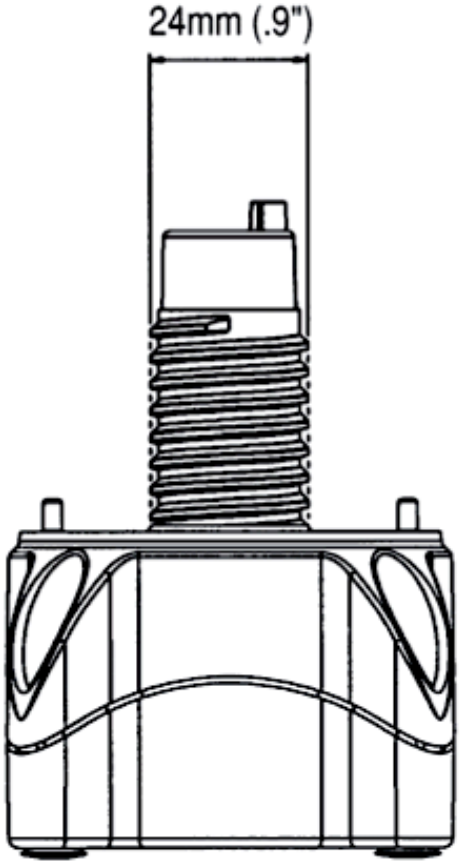
24mm (.9")