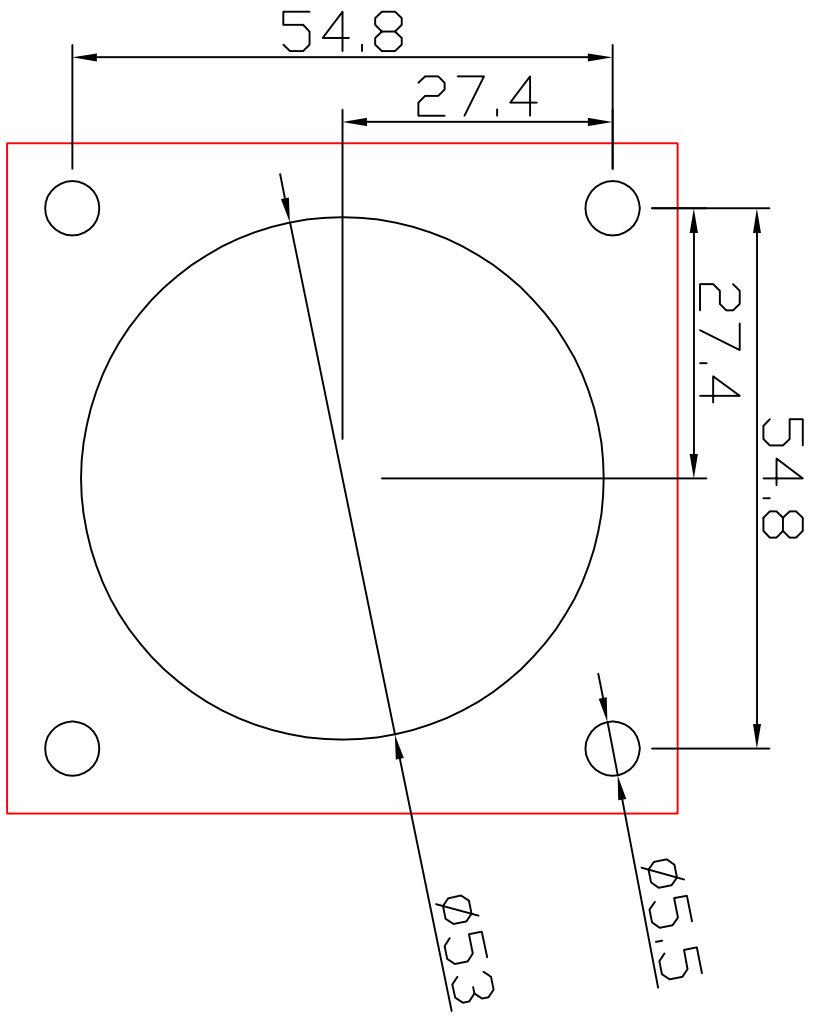
54.8
27.4
27.4
54.8
Ø53
Ø5.5